NITA
SMART LABELING SYSTEMS

Top, Bottom, C-Shape & Band-Labeling

JOUST 200

360
reasons to smile !

The Nita **JOUST 200-SSK 360°** fully synchronized label application system will meet all of your Top, Bottom, C-Shape tamper evident seal and complete 360° band labeling requirements. Using 2 highly reliable AE-612MKII labeling heads and a split conveyor, the Joust 200-SSK 360° system will apply both clear and opaque pressure sensitive labels with all the quality, accuracy and ease of use you have come to know and appreciate from the entire lineup of Nita labeling systems. This system's special feature is the servo motor driven swing arm that sweeps around the container to perfectly and accurately apply the finishing touch to your wrap-around label.

Nita has engineered the world's most technologically advanced label application systems. Our commitment to building incredibly **user friendly** equipment infused with ergonomic functionality and cutting edge technology truly differentiates our SMART labeling machines from the rest of the pack. Non-proprietary, maintenance-free parts and drive-managed servo motors form the backbone of Nita's Simply Easy™ formula where the fixed-position sensors work in perfect synchronicity with the conveyor belt and labeling head speeds. We pay attention to the small "quick changeover" details like high-precision rulers, color coded dials and one-touch adjustment handles that complement the intuitive Virtual Operator Assistant™ programmed with your setup recipes.

NITA IS THE INDUSTRY LEADER IN
LABEL APPLICATION EQUIPMENT
WITH IT'S INNOVATIVE TECHNOLOGY
AND EASY TO USE, SMART LABELING SYSTEMS !

- **VERY EASY TO OPERATE**
- **SIMPLE SETUPS**
- **QUICK CHANGEOVERS**
- **VIRTUALLY WASTE-FREE**
- **NO PROPRIETARY PARTS**

NITA. OUR PRODUCT APPLIES YOUR LABELS. WE SPECIALIZE IN YOUR SATISFACTION !
NO GUESSING – NO ENDLESS TWEAKING – NO MISTAKES

TOP, BOTTOM, C-SHAPE & BAND LABELING LABELER
Automatic In-line Labeling System

NO GUESSING – NO TWEAKING – NO MISTAKES

VIRTUAL OPERATOR ASSISTANT™

Nita's Virtual Operator Assistant™ software is the most easily understood and intuitive HMI ever developed for a labeling system. Operators will find this software extremely easy to use. Just enter the desired product on the large touch-screen display and the Virtual Operator Assistant™ walks you through the complete setup or changeover process. The result is perfectly placed labels every time!

- Program, name and store up to 50 products in memory
- Recall any product from memory
- Provides step-by-step mechanical adjustment information
- Automates the entire electronic system control and operation
- Displays on-screen system diagnostics and troubleshooting

QUICK AND EASY SETUPS AND CHANGEOVERS

QUICKADJUST™

Nita's QuickAdjust™ system features color-coded handles, knobs and measurement scales located at each adjustment point on the equipment. The precision scales eliminate all "guess work" and add repeatability to setup or changeover adjustments. Simply follow the Virtual Operator Assistant™ software that tells you exactly which adjustments to make and with the QuickAdjust™ system you're done in a snap!

- All machine adjustments are "tool-less"
- Mechanical adjustments are identified by both letters and color codes
- Each adjustment has a corresponding scale
- Scales are precisely marked for maximum repeatability
- Scales are easy to read and manipulate

SAVE TIME AND MONEY

SMARTSYNC™

Nita's SmartSync™ system is our smart drive communication that ensures complete synchronization of all labeling functions. Labels are always perfectly applied, regardless of speed, bunching or interruptions.

Stop, start, slow down, accelerate, change labels or containers all with no problem. SmartSync™ technology provides almost maintenance-free, highly reliable and accurate labeler performance!

- Motors equipped with smart drives for truly synchronized operation
- "Slow-motion" setup with adjustable speed control
- Significant improvement of labeling performance at any speed
- Virtual elimination of wasted labels and containers
- Years of reliable, maintenance-free operation

TOP, BOTTOM, C-SHAPE & BAND LABELING LABELER

Automatic In-line Labeling System

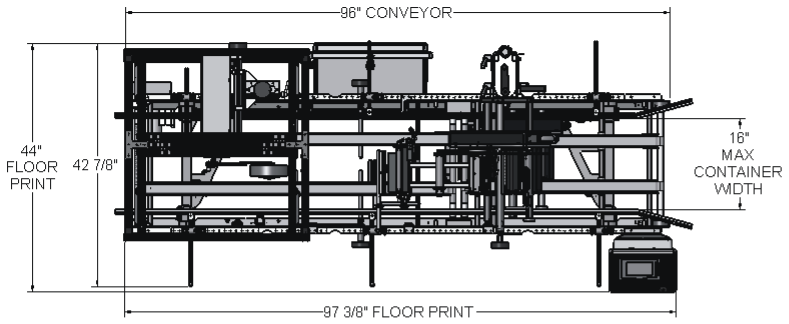

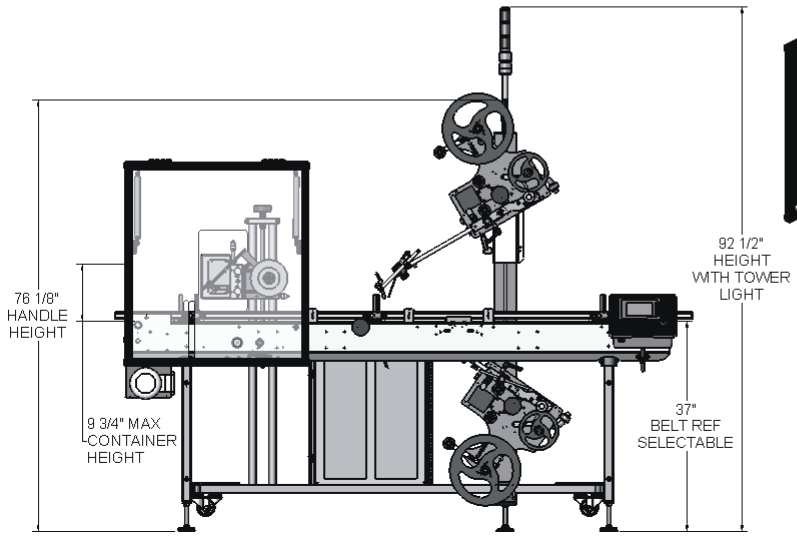

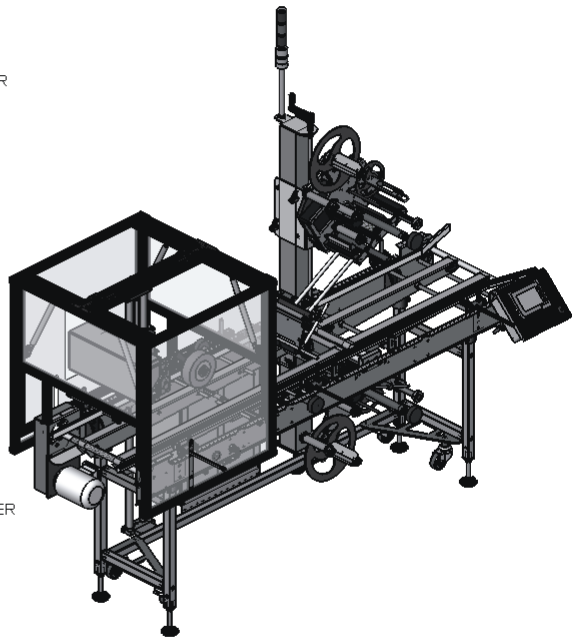

Power:	200-240 VAC, single phase, 60 Hz, 10 Amps
Labeling rate:	Synchronized 1570"/min (40 meters/min)
Accuracy:	+/- 1/32" (1.79 mm)
Min. label:	1/2" (12.7 mm) wide x 1/2" (12.7 mm) long
Max. label:	6" (152.4 mm) wide - Wide web width up to 9" (229 mm) option available
Media roll size:	12" (305 mm) OD on 3" (76 mm) CORE
Motor:	Synchronized encoded SERVO
Controller:	Touch screen HMI
Weight:	300 - 435 Lbs.
Label detection:	Photo-eye (fixed)

TOP, BOTTOM, C-SHAPE & BAND LABELING LABELER
Automatic In-line Labeling System

PERFORMANCE

- Servo driven AE612-MKII labeling heads
- Maintenance-free servo-motors
- Standard 6" web width (152.4 mm), 12" diameter media roll (304.8 mm) on 3"core (76.2 mm)
- Dispensing speeds up to 1570"/min (40meters/min)
- Dispensing precision of +/- 1/32" (1.79 mm)
- Adaptable peel plates angles
- Adjustable labeler height and tilt
- Tool less changeovers
- Clear product sensor
- User friendly color-evident adjustment markings

TECHNOLOGY CONTROLS

- No proprietary electronics & components
- "Open Architecture" servo programmable drive
- Stores up to 50 product setup recipes
- Complete product and label positioning recall
- USB port for easy back up
- Password protected HMI touch screen controller 5.7" (145 mm)
- Automatic electronic sensor positioning
- Automatic label length detection
- Automatic label teach and calibration
- Emergency stop on HMI console

INTEGRATED CONVEYOR

- 8' Stainless steel & anodized aluminum construction conveyor
- 2 x 1 5/8" (41 mm) adjustable belts and 2 x 1 5/8" (41 mm) fix belts with a middle split
- Max container width 15.5" (393.7mm)
- Side guide rails with scaled adjustments
- Encoded AC motor (1/2 HP)
- Maximum conveyor speed 130 feet/min
- Adjustable conveyor height

OPTIONS AVAILABLE

- Wide web width up to 9" (229 mm)
- Clear and opaque label sensor
- Status Lamp tower
- Low web sensor
- Zero down time
- Loose loop printer (for Print & Apply)
- Integration of any coder type

GREAT RETURN ON INVESTMENT

Nita smart labeling systems provide excellent value and ROI through outstanding labeling performance, ease of use, quick setups and changeovers, and the virtual elimination of rework and waste.

MEMBER PMMI

INTERTEK ETL LISTED C US

Distributed by

NITA SMART LABELING SYSTEMS